S-1 TYPE B KITCHEN SINK

AURORA COLLECTION

SPECIFICATIONS MODEL LS18304

GENERAL
Fine quality sink formed of heavy duty 18 gauge, type 304 nickel bearing stainless steel.

DESIGN FEATURES
Bowl depth 9” with inside bowl dimensions 21-3/8” X15-3/4” and over all 23-3/8” X 17-3/4”
Finish: Inside bowl surfaces polished to a uniform satin finish.
Underside: High density sound absorption pads covered with a thick rubberized insulation layer on all bottom surfaces.

Other: Drain opening 3 ½”.

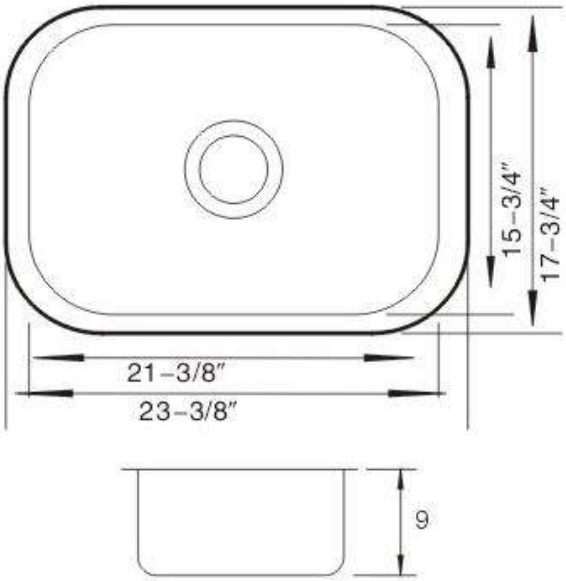

CUPC certified
Minimum cabinet size 24”
Product shall be specified as LS18304

OPTIONAL ACCESSORIES:
Sink Drain: A-SS-01, A-SS-02
Stainless Steel Grids: G304

Single-lever sink mixer 1/2

S-1 TYPE B KITCHEN SINK

MODEL # 32665001

Pure Freude an Wasser

GROHE America, Inc | 200 North Gary Avenue, Suite G, Roselle, IL 60172
Phone: +1 (800) 444-7643 | Fax: +1 (800) 225-2778 | us-customerservice@grohe.com

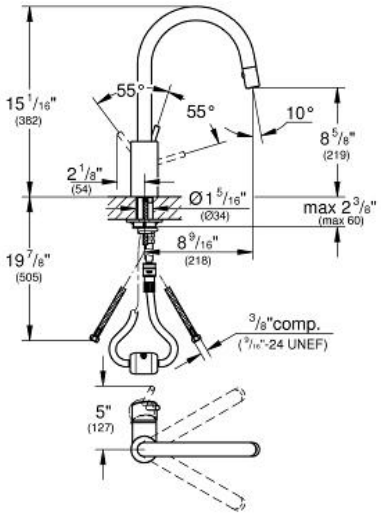

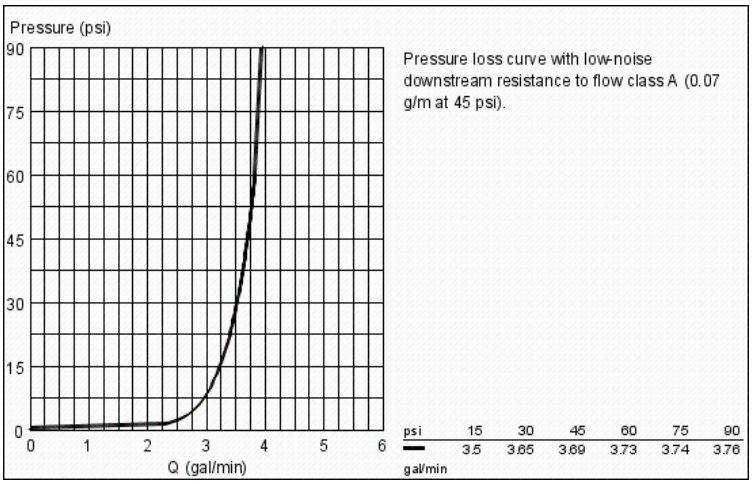

ADA

Product Description:
Single-lever sink mixer 1/2"

Standard Specification:
- High spout
- Single hole installation
- **GROHE StarLight®** finish
- **GROHE SilkMove** 35 mm ceramic cartridge
- Swivel Spout
- Integrated non-return valve
- **Protected against backflow**
- Stainless steel flex lines
- Quick installation system
- Max Flow Rate: 1.75 gpm (6.6 L/min)

Applicable Codes & Standards:
- Energy Policy Act of 1992
- NSF 61
- ASME A112.18.1/CSA B125.1
- US Federal and State material regulations
- ICC/ANSI A117.1
- CalGreen

Color:
❑ 32665001 001 chrome

S-1 TYPE B KITCHEN SINK

Dearborn® Brass
4675 W. 160th St.
Cleveland, Ohio 44135
Ph: (800) 321-9532
Fax: (800) 321-9535
www.dearbornbrass.com

SUBMITTAL SPECIFICATION

PLASTIC TUBULAR
1-½" P-TRAP WITH THREADED ADAPTER

Engineering Specification: Dearborn Brass Plastic Tubular 1-½" P-Traps with Threaded Adapter are designed for use in tubular drain applications. Options include PVC or ABS plastic adapter and True Blue Premium Washers for superior sealing. Available in white or black polypropylene plastic.

Job Reference

DESCRIPTION

- Made of polypropylene plastic
- Plastic Tubular P-Trap with Threaded Adapter
  - Plastic Tubular Quarter Bend
  - Plastic Tubular J-Bend
  - Schedule 40 Threaded Adapter
  - (3) Slip Joint Nuts
  - (1) 1-½" Washer
  - (1) 1-¼" x 1-½" Reducing Washer
- Reversible P-Trap includes reversible J-Bend
- Deep Flange P-Trap includes plastic deep flange

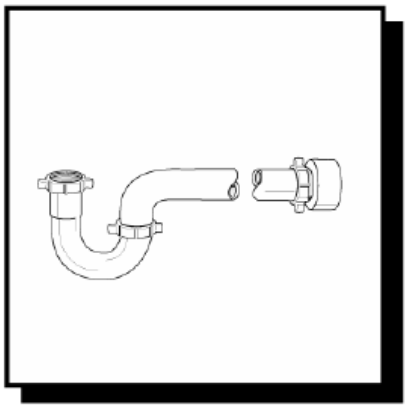

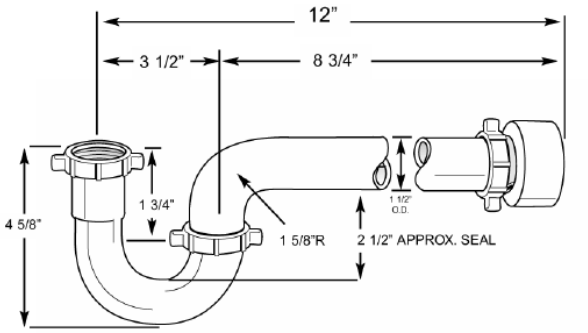

- Meets ASTM F 409
- IAPMO Listed

✓	Product No.	Description	Carton Quantity	Carton Weight (lbs)
	P9703W	1-½" P-Trap w/ Threaded PVC Adapter with True Blue Premium Washers – White		
	P9703BG	1-½" P-Trap w/ Threaded PVC Adapter & Reversible J-Bend – White, Bagged	25	19.4
	A9703WBG	1-½" P-Trap w/ Threaded PVC Adapter & Reversible J-Bend with True Blue Premium Washers –Black, Bagged	25	19.4
	P9704	1-½" P-Trap w/ Threaded PVC Adapter – White	25	11.8
	A9704	1-½" P-Trap w/ Threaded ABS Adapter – Black	25	11.7
	P9704A	1-½" P-Trap w/ Threaded ABS Adapter – White	25	11.8
	P9704AB	1-½" P-Trap w/ Threaded ABS Adapter – White, Bagged	25	19.2
	P9704BG	1-½" P-Trap w/ Threaded PVC Adapter – White, Bagged	25	19.4
	P9704AWB	1-½" P-Trap w/ Threaded ABS Adapter & Reversible J-Bend with True Blue Premium Washers – White, Bagged	25	19.4
	A9704B	1-½" P-Trap w/ Threaded ABS Adapter – Black, Bagged	25	19.3
	P9704DF	1-½" P-Trap w/ Threaded PVC Adapter & Deep Flange– White	25	12.8
	A9704DF	1-½" P-Trap w/ Threaded ABS Adapter & Deep Flange – Black	25	12.6
	P9704DFB	1-½" P-Trap w/ Threaded PVC Adapter & Deep Flange – White, Bagged	25	21.2
	A9704WB	1-½" P-Trap w/ Threaded ABS Adapter & Reversible J-Bend with True Blue Premium Washers – Black, Bagged	25	19.4

S-1 TYPE B KITCHEN SINK

AQUAFLO®

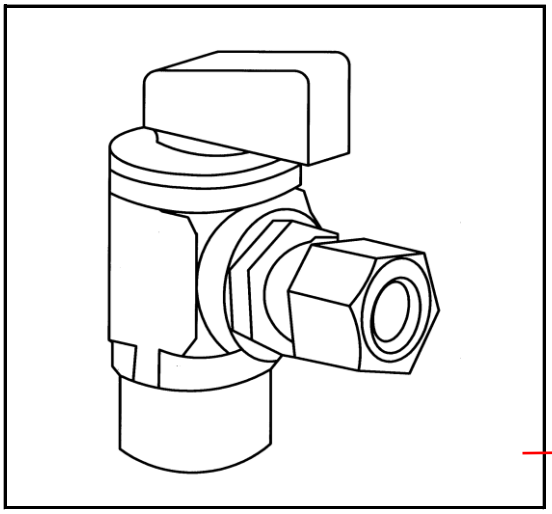

QUARTER-TURN ANGLE VALVES

Specification Sheet

NICKEL		
PART NUMBER	INLET	OUTLET
V-001-A	5/8" O.D. Compr	1/4" O.D. Compr
V-100-A	1/2" Sweat	3/8" O.D. Compr
V-101-A	5/8" O.D. Compr	3/8" O.D. Compr
V-102-A	1/2" F.I.P.	3/8" O.D. Compr
V-103-A	1/2" PEX	3/8" O.D. Compr
V-104-A	1/2" WIRSBO PEX	3/8" O.D. Compr
V-105-A	3/8" F.I.P.	3/8" O.D. Compr
V-106-A	3/8" O.D. Compr	3/8" O.D. Compr
V-107-A	1/2' F.I.P.	3/4" Hose Thread
V-300-A	1/2" Sweat	1/2" O.D. Compr
V-301-A	5/8" O.D. Compr	1/2" O.D. Compr
V-302-A	1/2" F.I.P.	1/2" O.D. Compr
V-303-A	1/2" PEX	1/2" O.D. Compr
V-400-A	1/2" Sweat	1/2" OR 7/16" Slip Joint
V-401-A	5/8" O.D. Compr	1/2" OR 7/16" Slip Joint
V-402-A	1/2" F.I.P.	1/2" OR 7/16" Slip Joint
V-403-A	1/2" PEX	1/2" M.I.P. / Sweat
V-500-A	1/2" CPVC	3/8" O.D. Compr
V-602-A	5/8" O.D. Compr	3/8" O.D. Compr.
POLISHED BRASS		
V-201-A	5/8" O.D. Compr	3/8" O.D. Compr
V-202-A	1/2" F.I.P.	3/8" O.D. Compr

For Lead Free product add "-LL" to the end of the part number.

DESIGN FEATURES

- Quick quarter-turn shut-off.
- Heavy duty brass construction ensures durability.
- Ball style valve will not freeze up.
- Teflon seats for extra wear resistnace.
- Pliable 0-rings will not distort or break down.
- One-year limited warranty

COMPLIANCES/LISTINGS

- IAPMO Certified
- NSF Compliant
- Meet or exceed ASME A112.18.1
- Federal Specification WWP 541E

Certified to NSF/ANSI 61

UPC C ®

OPERATING SPECIFICATION

Temperature: 40-180ºF
Pressure: 125 PSI max.

Product Submittal	
Job Name	
Date	
Part Number	Quantity
Architect	
Contractor	

LSP PRODUCTS GROUP
3689 Arrowhead Drive, Carson City, NV 89706
Phone (800) 854-3215 Fax (800) 243-1777
E-mail sales@lspproducts.com Website www.lspproducts.com

Content matter is subject to change at any time. It is the user's responsibility to ensure the most updated revisions are obtained.

AF/S-2017 (05-11) Rev 3